RS-WS-N01-YM-1
Leaf temperature and humidity transmitter
Model 485
instruction manual

Document version: V1.0

content

1. product description.....3
product description.....3
Features.....3
technical parameter.....3
product model.....4
2. Dimensions.....4
3. How to use.....4
4. Equipment installation instructions.....5
Inspection before equipment installation.....5
Interface Description.....5
Wiring instructions.....5
5. Configuration software installation and use.....6
Software selection.....6
parameter settings.....6
6. Communication protocol.....7
Basic communication parameters.....7
Data frame format definition.....7
Register address.....8
Communication protocol example and explanation.....8
7. Common problems and solutions.....9
The device cannot connect to the PLC or computer.....9
8. Contact.....9
9. Document history.....10

1.product description

product description

The temperature sensor is composed of a high-precision thermistor and a transmitter, which can accurately measure the temperature in the entire range. The humidity sensor is based on the principle of dielectric constant measurement to simulate the shape of the blade and truly simulate the surface characteristics of the blade. The humidity can be accurately measured by the change in the dielectric constant of the blade surface. With good sensitivity, it can detect the trace moisture residue on the leaf surface. The leaf temperature and humidity transmitter adopts waterproof design, low power consumption, and can be continuously monitored for a long time. It is easy to install and can be hung inside the greenhouse or on the branches of trees for long-term uninterrupted monitoring. It is widely used to measure the surface humidity of plants or objects in greenhouses, laboratories, breeding, production environments, and artificial climate rooms.

Features

1) Imitate the characteristics of the leaf surface, quickly and accurately measure the temperature and humidity.

2) The denser leaf vein patterns (15 lines/cm) can detect smaller droplets and the measurement is more sensitive.

3) The humidity measurement is sensitive and can accurately detect the humidity of the leaf surface.

4) High precision, fast response and good interchangeability.

5) Epoxy resin encapsulation, waterproof and moisture-proof, longer life.

technical parameter

DC power supply (default)	DC 5-30V	
Maximum power consumption	0.75W (12V DC power supply)	
Operating temperature	-40℃~+60℃	
Humidity parameters	Range	0-100%RH
	Resolution	0.1%RH
	Precision	±5%RH (@25℃)
Temperature parameter	Range	-40~80℃
	Resolution	Resolution: 0.1℃
	Precision	±0.5℃ (@25℃)
Protection level	IP67	
Sealing material	Black flame-retardant epoxy resin	
Default cable length	2 meters, the cable length can be customized according to	

	requirements
Dimensions	45*15*123mm
output signal	RS485 (Modbus protocol)

product model

ES-				Company code
	WS-			Temperature and humidity transmitter
	SD-			Humidity transmitter
		C01-		RS485 (Modbus-RTU protocol)
			YM-1	Foliage appearance

2.Dimensions

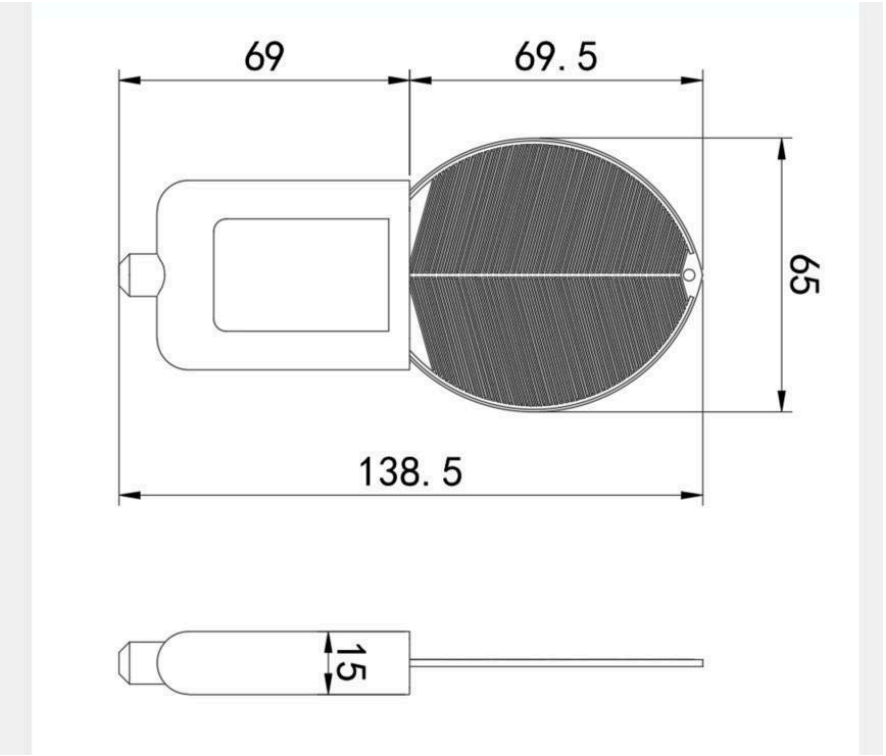

Equipment size drawing (unit: mm)

3. How to use

Place the Leaf temperature and humidity transmitter next to the crops or leaves, use non-metallic wire to pass through the small hole in the front of the leaf sensor, and hang it on the branch of the tree through the wire. Use the wire to fix the young branch or On the stalk. The angle of inclination and direction are close to the angle of the leaf surface of the plant, and the spraying situation of the leaf surface can be sensed. The ideal position of the leaf humidity sensor should be installed at a distance of more than 1 meter from the ground, and it can be hung above the plants to avoid direct sunlight as much as possible. Clean the equipment at least once a month

during continuous work, mainly to clean the ice, snow, dust, etc. deposited on the surface of the equipment.

4.Equipment installation instructions

Inspection before equipment installation

Equipment List:

■1 set of sensor equipment

■Qualification certificate, warranty card, wiring instructions, etc.

Interface Description

Wide-voltage power supply input can be 4.5~30V. When wiring the 485 signal line, pay attention to the two lines A/B not to be reversed, and the addresses of multiple devices on the bus must not conflict.

Wiring instructions

Thread color	instruction	Remark
Brown	Power is positive	4.5~30V DC
black	Power ground	GND
yellow	485-A	485-A
blue	485-B	485-B

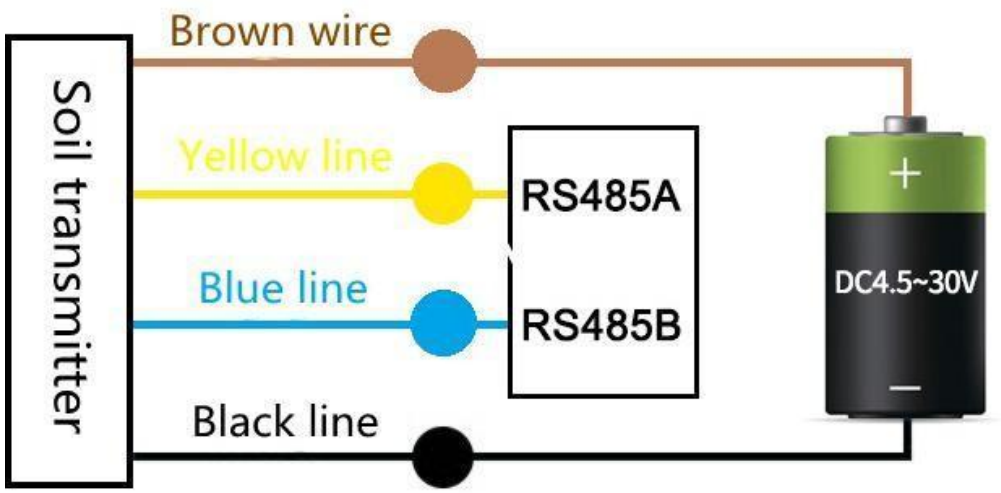

5.Configuration software installation and use

Software selection

Open the data package, select "Debugging Software" --- "485 Parameter Configuration Software", find and open it.

parameter settings

①. Select the correct COM port (check the COM port in "My Computer—Properties—Device Manager—Port"). The following figure lists the driver names of several different 485 converters.

② Connect only one device alone and power it on, click the test baud rate of the software, the software will test the baud rate and address of the current device, the default baud rate is 4800bit/s, and the default address is 0x01.

③. Modify the address and baud rate according to the needs of use, and at the same time, you can query the current function status of the device.

④. If the test is unsuccessful, please recheck the equipment wiring and 485 driver installation.

6. Communication protocol

Basic communication parameters

Code	8-bit binary
Data bit	8-bit
Parity bit	none
Stop bit	1 person
Error checking	CRC (Redundant Cyclic Code)
Baud rate	Can be set, the factory default is 4800bit/s

Data frame format definition

Using Modbus-RTU communication protocol, the format is as follows:

Initial structure ≥ 4 bytes of time

Address code = 1 byte

Function code = 1 byte

Data area = N bytes

Error check = 16-bit CRC code

Time to end structure ≥ 4 bytes

Address code: the address of the transmitter, which is unique in the communication network (factory default 0x01).

Function code: the command function instruction issued by the host.

Data area: The data area is the specific communication data, pay attention to the high byte of the 16bits data first!

CRC code: two-byte check code.

Host query frame structure:

Slave machine response frame structure:

address code	functio n code	Number of valid bytes	Data area	Data area two	Data N area	Check code low byte	Check code high byte
1 byte	1 byte	1 byte	2 bytes	2 bytes	2 bytes	1 byte	1 byte

Register address

Register address	PLC or configuration address	content	operate	Definition description
0000 H	40001 (decimal)	humidity	Read only	Real-time value of water content (expanded 10 times)
0001 H	40002 (decimal)	temperature	Read only	Real-time temperature value (expanded 10 times)
0050 H	40081 (decimal)	Temperature deviation	Read and write	Integer (expanded by 10 times)
0051 H	40082 (decimal)	Humidity deviation value	Read and write	Integer (expanded by 10 times)
07D0 H	42001 (decimal)	Device address	Read and write	1~254 (factory default 1)
07D1 H	42002 (decimal)	Device baud rate	Read and write	0 means 2400 1 is 4800 2 is 9600

Communication protocol example and explanation

Example: Read the temperature and humidity value of the leaf temperature and humidity

device (address 0x01)

Interrogation frame

address code	function code	starting address	Data length	Check code low byte	Check code high byte
0x01	0x03	0x00 0x00	0x00 0x03	0x05	0xCB

Reply frame

address code	function code	Return valid Number of bytes	Humidity value	Temperature value	Conductivity value	Check code Low byte	Check code High byte
0x01	0x03	0x06	0x02 0x92	0xFF 0x9B	0x03 0xE8	0xD8	0x0F

Temperature calculation:

When the temperature is lower than 0 ℃ , the temperature data is uploaded in the form of complement code.

Temperature: FF9B H (hexadecimal) = -101 => temperature = -10.1℃

Humidity calculation:

Humidity: 292 H (hexadecimal) = 658 => Humidity = 65.8%, that is, the leaf surface humidity is 65.8%.

7.Common problems and solutions

The device cannot connect to the PLC or computer

possible reason:

1) The computer has multiple COM ports, and the selected port is incorrect.

2) The device address is wrong, or there are devices with duplicate addresses (the factory default is all 0x01).

3) The baud rate, check method, data bit and stop bit are wrong.

4) The 485 bus is disconnected, or the A and B wires are connected reversely.

5) If the number of equipment is too long or the wiring is too long, power supply should be nearby, add 485 booster, and add 120Ω terminal resistance at the same time.

6) The USB to 485 driver is not installed or damaged.

7) The equipment is damaged.